Attachment 1
Line Item 0001

Letter & Match Work Envelope

(White Window & Double Window 9 1/2" X 4 1/8")

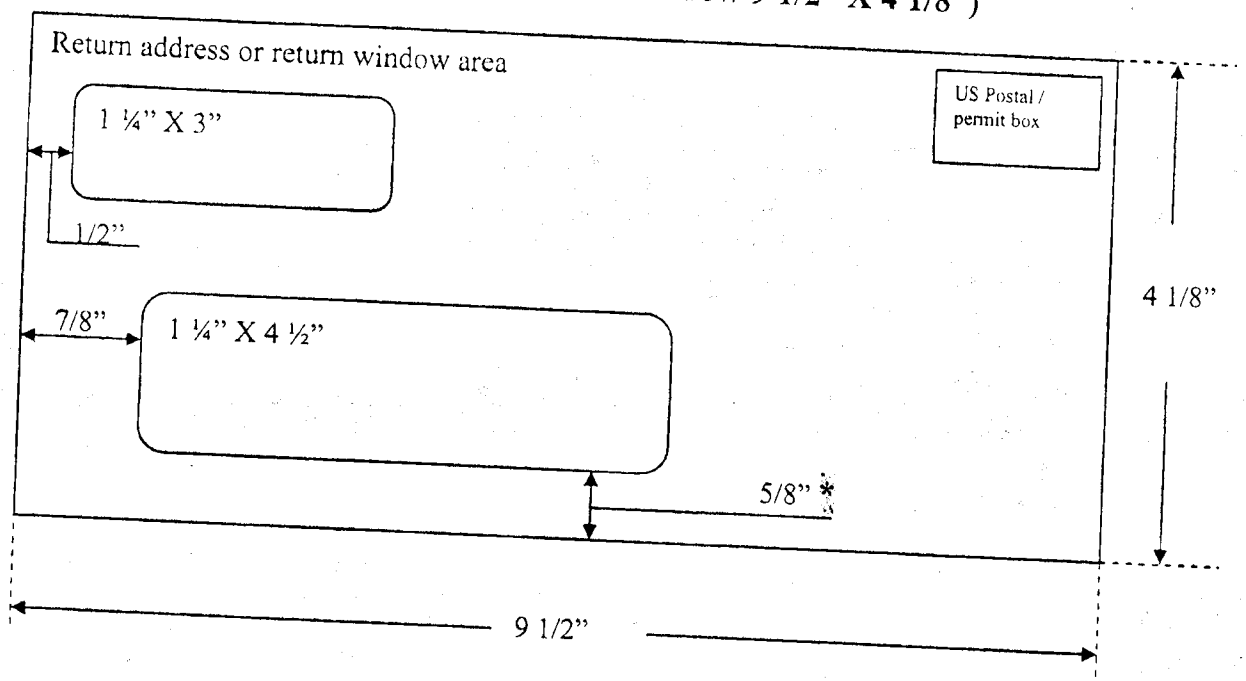

* No less than 5/8" to prevent mail stream hooking

Attachment 2
Line Item 0002

Letter, Multiple Letters & Match Jobs (White Single Window 9 1/2" X 4 1/8")
DOL Daily Roll, 133s, & Letters that require our return address.

DEPARTMENT OF THE TREASURY
FINANCIAL MANAGEMENT SERVICE
REGIONAL FINANCIAL CENTER
PO BOX 51318
PHILADELPHIA, PENNSYLVANIA 19115-6320

OFFICIAL BUSINESS
PENALTY FOR PRIVATE USE $300

FIRST CLASS Mail
POSTAGE AND FEES PAID
DEPARTMENT OF
THE TREASURY
PERMIT NO. G - 4

Attachment 3
Rear single and double window envelopes design

Letter & Match Work Envelope 24lb
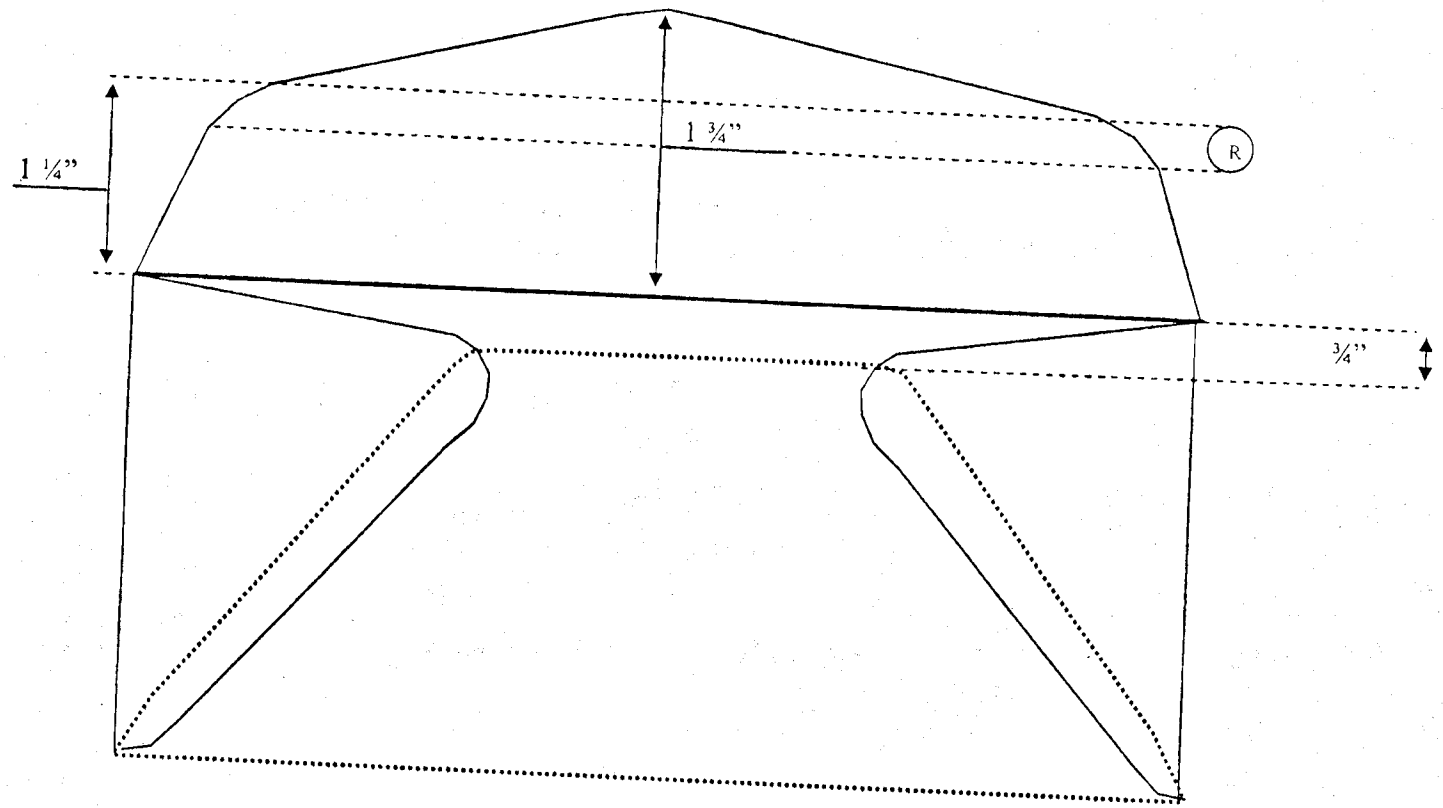
(White Window & Double Window 9 1/2" X 4 1/8")